CONSTRUCTION PLANS

CITY OF DOVER

* MAST ROAD & SPRUCE LANE SIDEWALKS AND DRAINAGE DOVER, NEW HAMPSHIRE - PROJECT B11054 *

LIST OF PLANS

T-1 - TITLE SHEET
T-2 - INDEX SHEET
C-1 - SPRUCE LANE PLAN AND PROFILE
C-2 - SPRUCE LANE PLAN AND PROFILE
C-3 - SPRUCE LANE PLAN AND PROFILE
C-4 - SPRUCE LANE PLAN AND PROFILE
C-5 - SPRUCE LANE PLAN AND PROFILE
C-6 - SPRUCE LANE PLAN AND PROFILE
C-7 - SPRUCE LANE PLAN AND PROFILE
~~C-8 - MAST ROAD PLAN AND PROFILE~~
~~C-9 - MAST ROAD PLAN AND PROFILE~~
~~C-10 - MAST ROAD PLAN AND PROFILE~~
~~C-11 - MAST ROAD PLAN AND PROFILE~~
~~C-12 - MAST ROAD PLAN AND PROFILE~~
~~C-13 - MAST ROAD PLAN AND PROFILE~~
~~C-14 - MAST ROAD PLAN AND PROFILE~~
~~C-15 - MAST ROAD PLAN AND PROFILE~~
C-16 - CONSTRUCTION DETAILS
C-17 - CONSTRUCTION DETAILS

*SPRUCE LANE DRAINAGE AND ROAD WIDENING PORTION *

PREPARED FOR
CITY OF DOVER
288 CENTRAL AVENUE
DOVER, NH 03820

PREPARED BY
TRITECH
ENGINEERING CORPORATION

Amended BY
Dave White, P.E.
DOVER City Engineer

TRITECH
ENGINEERING CORPORATION
755 CENTRAL AVENUE
DOVER, NEW HAMPSHIRE 03820
TELEPHONE 603 742 8107
FAX 603 742 2523

REVISIONS
DATE:	DESCRIPTION:	
3/11/2013	REVISE PER ENGINEERING COMMENTS	
3/19/2014	REVISE PER ENGINEERING COMMENTS	
6/24/16	TDW	

TITLE SHEET
CITY OF DOVER
MAST ROAD & SPRUCE LANE
SPRUCE LANE
DOVER, NEW HAMPSHIRE
SEPTEMBER 1, 2011 JOB No. 11105

SHEET NO.
T-1

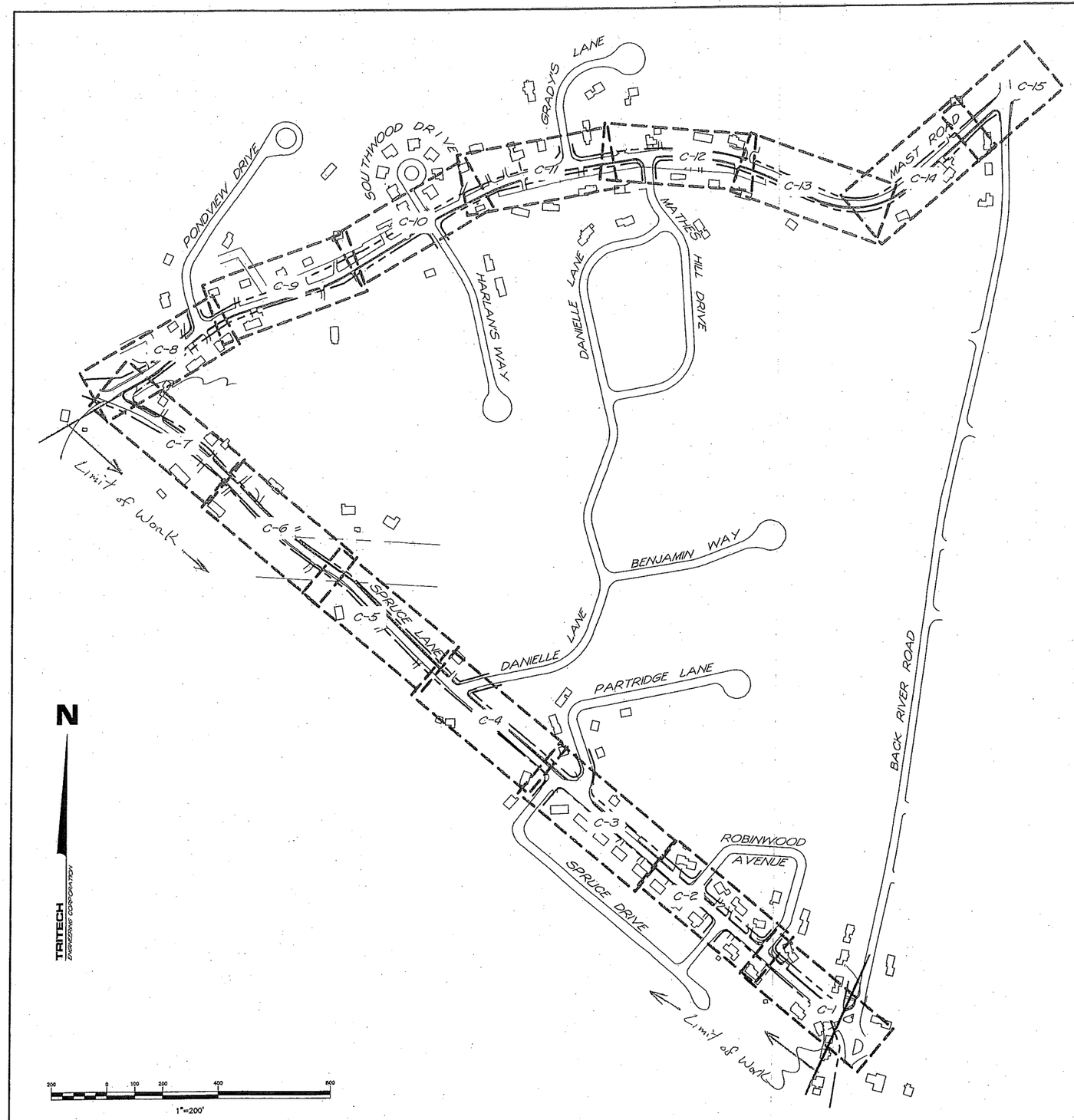

SHEET	START STATION	END STATION
C-1	0+00	4+00
C-2	4+00	9+00
C-3	9+00	14+25
C-4	14+25	19+50
C-5	19+50	24+50
C-6	24+50	29+50
C-7	29+50	34+67.13 (END)
C-8	40+00	45+00
C-9	45+00	50+00
C-10	50+00	55+00
C-11	55+00	60+00
C-12	60+00	65+00
C-13	65+00	70+00
C-14	70+00	74+00
C-15	74+00	76+67.46 (END)

TRITECH
ENGINEERING CORPORATION
755 CENTRAL AVENUE
DOVER, NEW HAMPSHIRE 03820
TELEPHONE 603 742 9117
FAX 603 742 3630

REVISIONS

DATE:	DESCRIPTION:
3/11/2013	REVISE PER ENGINEERING COMMENTS
3/19/2014	REVISE PER ENGINEERING COMMENTS
6/26/16	DW

INDEX SHEET

CITY OF DOVER
MAST ROAD & SPRUCE LANE
SPRUCE LANE

DOVER, NEW HAMPSHIRE

SEPTEMBER 1, 2011 JOB No. 11105

SCALE: 1" = 200'

SHEET NO.

T-2

15 June 2016 11:03:41 a.m. Jeff.pdf 11:03:41 a.m. Jeff.pdf

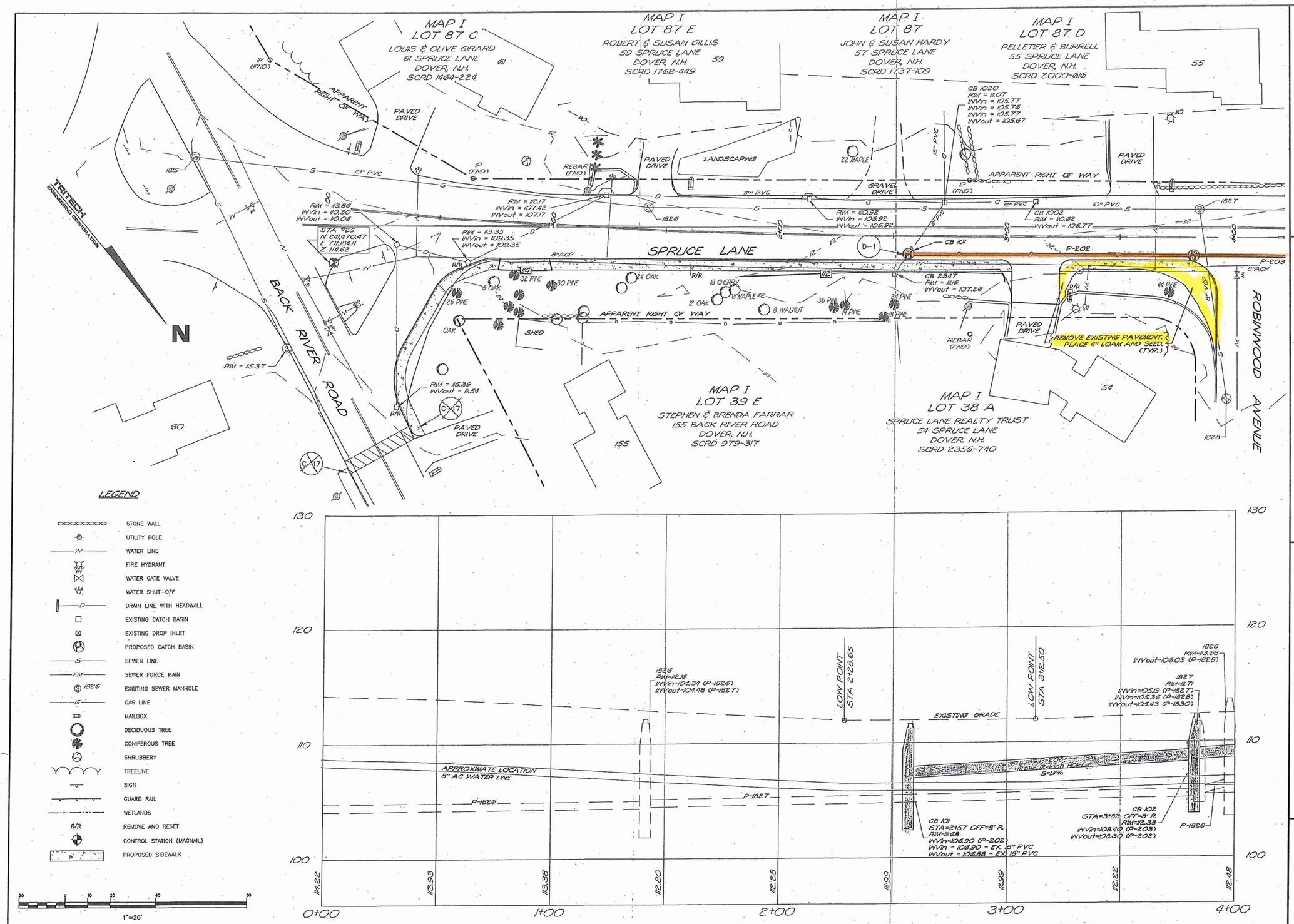

TRITECH
ENGINEERING CORPORATION

755 CENTRAL AVENUE
DOVER, NEW HAMPSHIRE 03820
TELEPHONE 603 742 8107
FAX 603 742 8630

REVISIONS

DATE:	DESCRIPTION:
3/11/2013	REVISE PER ENGINEERING COMMENTS
3/19/2014	REVISE PER ENGINEERING COMMENTS
6/25/16	P.W.

ROADWAY PLAN AND PROFILE
CITY OF DOVER
MAST ROAD & SPRUCE LANE
SPRUCE LANE
DOVER, NEW HAMPSHIRE
SEPTEMBER 1, 2011 JOB No. 11105
SCALE: 1" = 20'

SHEET NO.
C-1

13 June 2016 TR105-Full Set.pdf TR105-Full Set.pdf

MAP I
LOT 27 C
PAUL & PAMELA FORTIN
53 SPRUCE LANE
DOVER, N.H.
SCRD 1729-404

MAP I
LOT 27 D
MICHAEL & CATHERINE MAWBY
51 SPRUCE LANE
DOVER, N.H.
SCRD 823-401

MAP I
LOT 27 E
JOHN LEAHY JR LIFE ESTATE
49 SPRUCE LANE
DOVER, N.H.
SCRD 1767-186

MAP I
LOT 27 F
CARPENTER REV. TRUST
47 SPRUCE LANE
DOVER, N.H.
SCRD 812-314

SPRUCE DRIVE

SPRUCE LANE

ROBINWOOD AVENUE

ROBINWOOD AVENUE

APPARENT RIGHT OF WAY

PAVED DRIVE

10" PVC

8"ACP

CB 102

CB 103

CB 104a

CB 104

P-203
8"ACP

P-204a

P-204

REMOVE EX. PAVEMENT, PLACE 4" LOAM AND SEED.

MAP I
LOT 38 B
KENNETH & PATRICIA MOORE
52 SPRUCE LANE
DOVER. N.H.
SCRD 677-157

MAP I
LOT 38 C
BRETT & DANA HORR
14 PINECREST DRIVE
YORK, MAINE
SCRD 2814-369

MAP I
LOT 38 D
MILLER FAMILY TRUST
48 SPRUCE LANE
DOVER, N.H.
SCRD 3713-459

MAP I
LOT 38 H
MICHAEL & SHEILA MONE
46 SPRUCE LANE
DOVER, N.H.
SCRD 1438-508

20 0 10 20 40
1"=20'

N

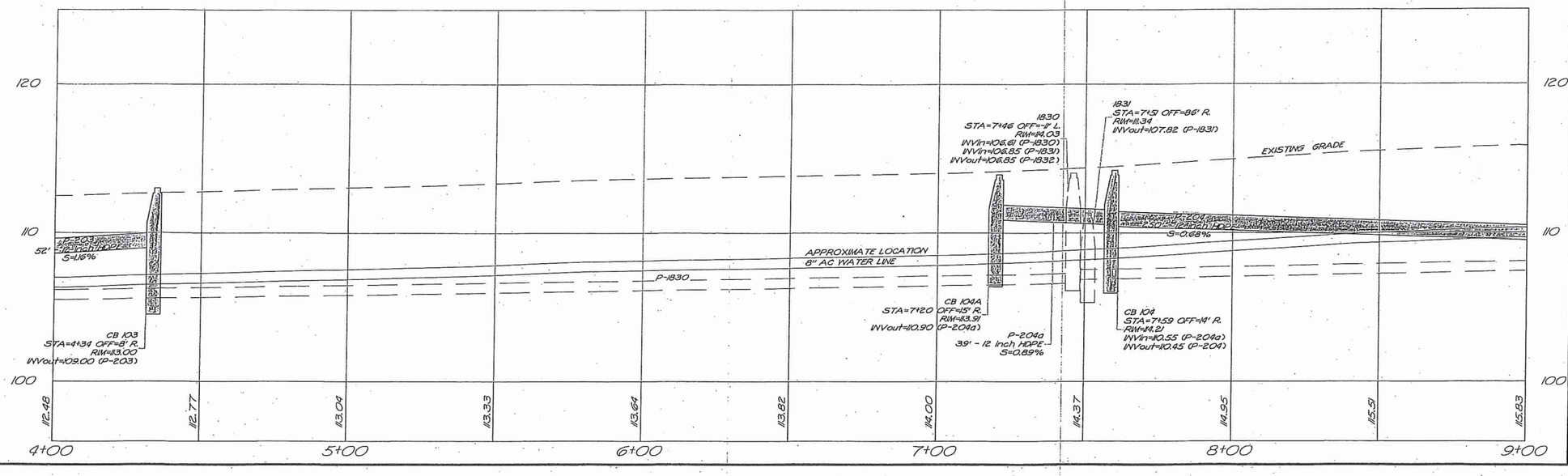

TRITECH
ENGINEERING CORPORATION
765 CENTRAL AVENUE
DOVER, NEW HAMPSHIRE 03820
TELEPHONE 603 742 8107
FAX 603 742 3630

REVISIONS	
DATE:	DESCRIPTION:
3/11/2013	REVISE PER ENGINEERING COMMENTS
3/19/2014	REVISE PER ENGINEERING COMMENTS
6/30/16	TWL

ROADWAY PLAN AND PROFILE
CITY OF DOVER
MAST ROAD & SPRUCE LANE
SPRUCE LANE
DOVER, NEW HAMPSHIRE
SEPTEMBER 1, 2011 JOB No. 1105
SCALE: 1" = 20'

SHEET NO.
C-2

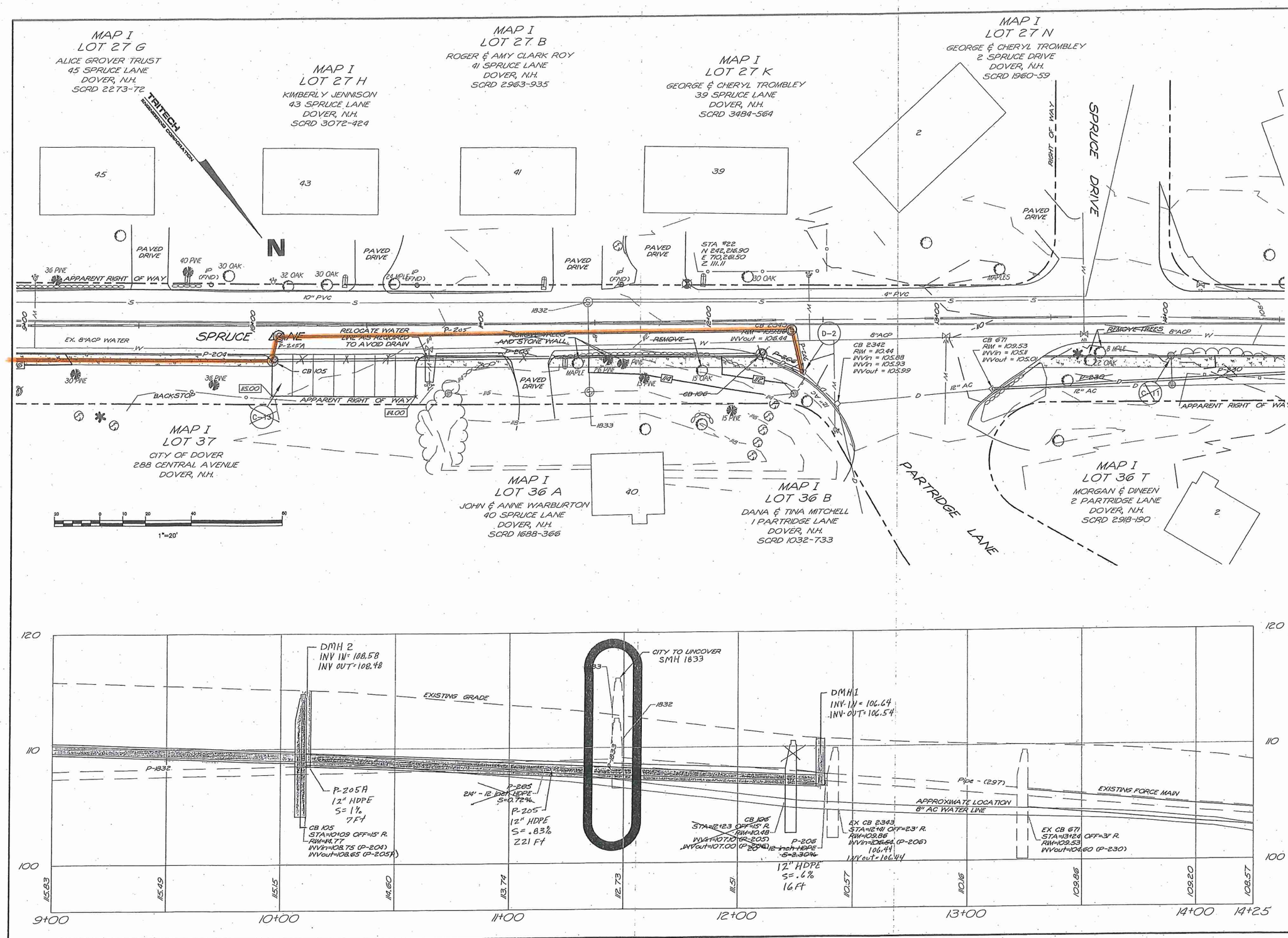

TRITECH
ENGINEERING CORPORATION

755 CENTRAL AVENUE
DOVER, NEW HAMPSHIRE 03820
TELEPHONE 603 742 8107
FAX 603 742 3630

REVISIONS DATE:	DESCRIPTION:
3/11/2013	REVISE PER ENGINEERING COMMENTS
3/19/2014	REVISE PER ENGINEERING COMMENTS
6/20/16	TPW

ROADWAY PLAN AND PROFILE
CITY OF DOVER
MAST ROAD & SPRUCE LANE
SPRUCE LANE
DOVER, NEW HAMPSHIRE
SEPTEMBER 1, 2011 JOB No. 11105
SCALE: 1" = 20'

SHEET NO.
C-3

MAP I
LOT 27 I
MARK THOMAS
1 SPRUCE DRIVE
DOVER, N.H.
SCRD 2281-171

MAP I
LOT 27
RUTH COLPRIT LIFE ESTATE
33 MESERVE ROAD
DOVER, N.H.
SCRD 630-474

MAP I
LOT 27 A
JAY & JOYCE STEPHENS
33 SPRUCE LANE
DOVER, N.H.
SCRD 983-539

33

TRITECH ENGINEERING CORPORATION

N

MESERVE ROAD (GRAVEL)

130 SQ. FT. WETLAND IMPACT

PROPOSED HEADWALL

D.E.S. PERMIT REQUIRED FOR WORK IN WETLANDS

PROPOSED STONE

PROPOSED ROAD WIDENING

22 OAK

APPARENT RIGHT OF WAY

SPRUCE LANE

4" FORCE MAIN

8"ACP

CB 107

P-230

P-231

P-232

12" AC

APPARENT RIGHT OF WAY TO BE REMOVED - RIM = 104.86 INVin = 101.18 INVin = 101.16 INVout = 101.1

55 (FND)

CB 130 TYPE 'C' INVout = 101.45 - P-231 Tie In Existing 12"HC pipe To New CB 130

165 SQ. FT. WETLAND IMPACT

DMH 2345 - TO BE REMOVED RIM = 105.30 INVin = 101.90 INVout = 101.45

APPARENT RIGHT OF WAY

GB (FND)

2" OAK

CB 2926 RIM = 107.87 INVin = 101.85 INVin = 101.89 INVout = 101.49 - P-229

APPARENT RIGHT OF WAY

DANIELLE LANE

GB (FND)

CB 2924 RIM = 107.11 INVout = 101.89

PAVED DRIVE

C-17

8"ACP

R/R MAILBOX (TYP.)

8 MAPLE

15 MAPLE

MAP I
LOT 35 A
MICHAEL & JACLYN ROMPS
36 SPRUCE LANE
DOVER, N.H.
SCRD 2724-288

MAP I
LOT 36 U
WALTER FISCHER
542 CENTRAL AVENUE
DOVER, N.H.
SCRD 2450-20

2

36

20 0 10 20 40 60
1"=20'

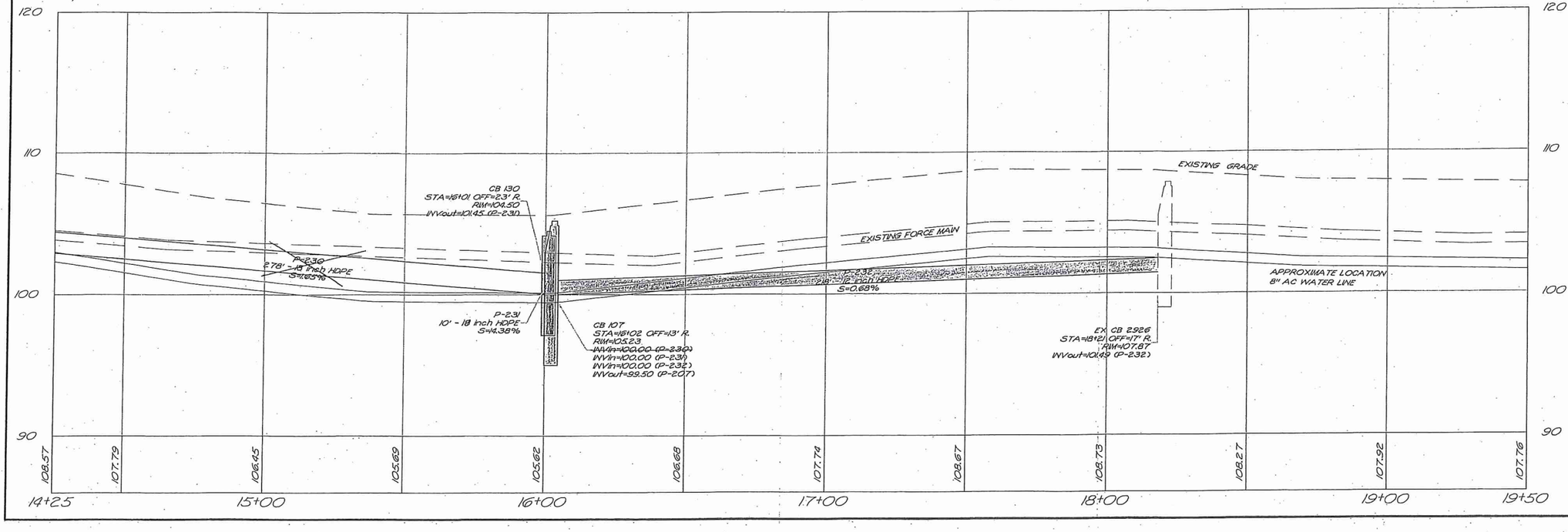

TRITECH
ENGINEERING CORPORATION

755 CENTRAL AVENUE
DOVER, NEW HAMPSHIRE 03820
TELEPHONE 603 742 8107
FAX 603 742 2630

REVISIONS

DATE:	DESCRIPTION:
3/11/2013	REVISE PER ENGINEERING COMMENTS
3/19/2014	REVISE PER ENGINEERING COMMENTS
4/25/16	DRW

ROADWAY PLAN AND PROFILE
CITY OF DOVER
MAST ROAD & SPRUCE LANE
SPRUCE LANE
DOVER, NEW HAMPSHIRE
SEPTEMBER 1, 2011 JOB No. 11105
SCALE: 1" = 20'

SHEET NO.
C-4

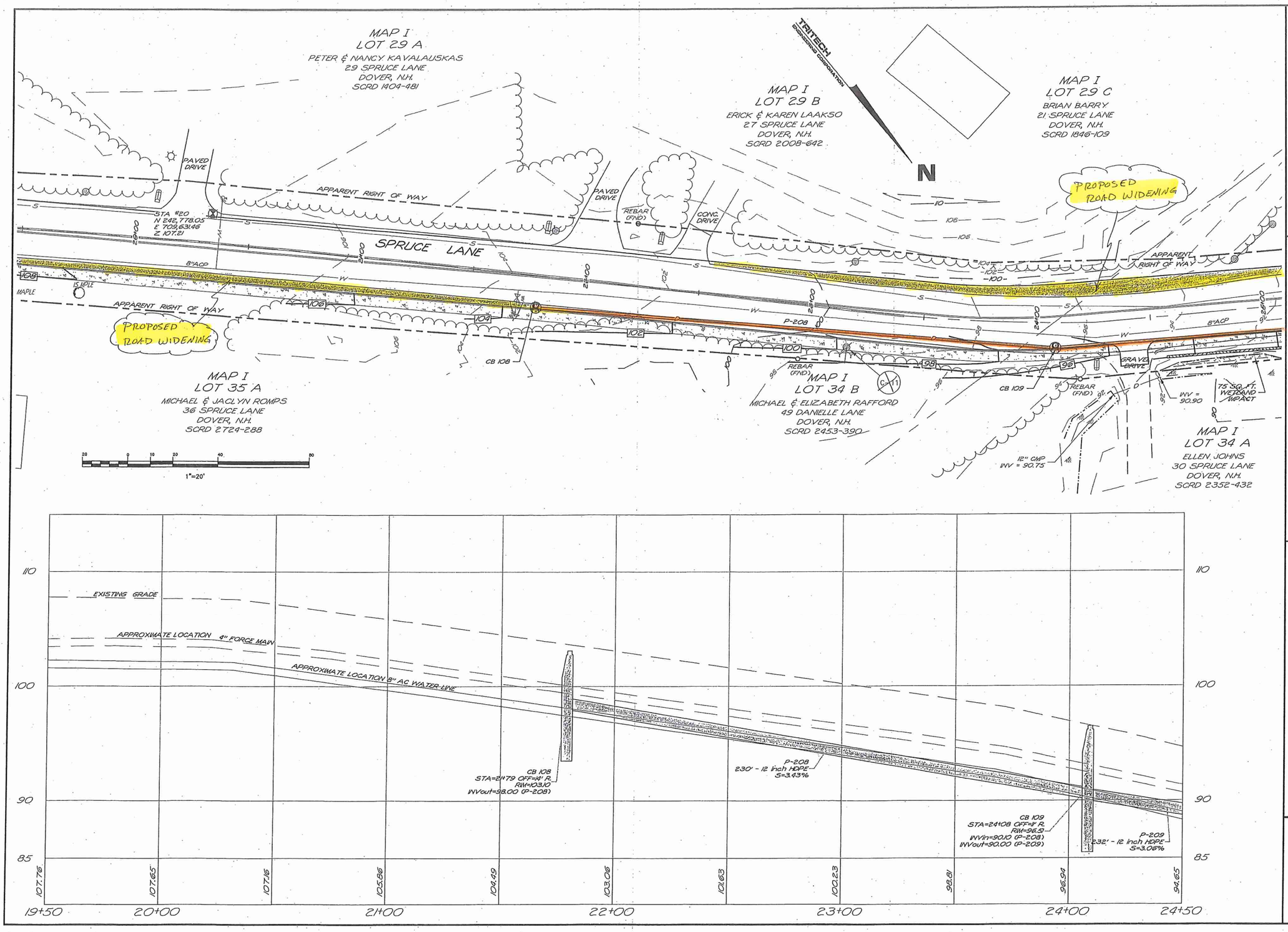

TRITECH ENGINEERING CORPORATION

755 CENTRAL AVENUE
DOVER, NEW HAMPSHIRE 03820
TELEPHONE 603 742 8107
FAX 603 742 3830

REVISIONS

DATE:	DESCRIPTION:
3/11/2013	REVISE PER ENGINEERING COMMENTS
3/19/2014	REVISE PER ENGINEERING COMMENTS
6/20/16	DW

ROADWAY PLAN AND PROFILE
CITY OF DOVER
MAST ROAD & SPRUCE LANE
SPRUCE LANE
DOVER, NEW HAMPSHIRE
SEPTEMBER 1, 2011 JOB No. 11105
SCALE: 1" = 20'

SHEET NO.
C-5

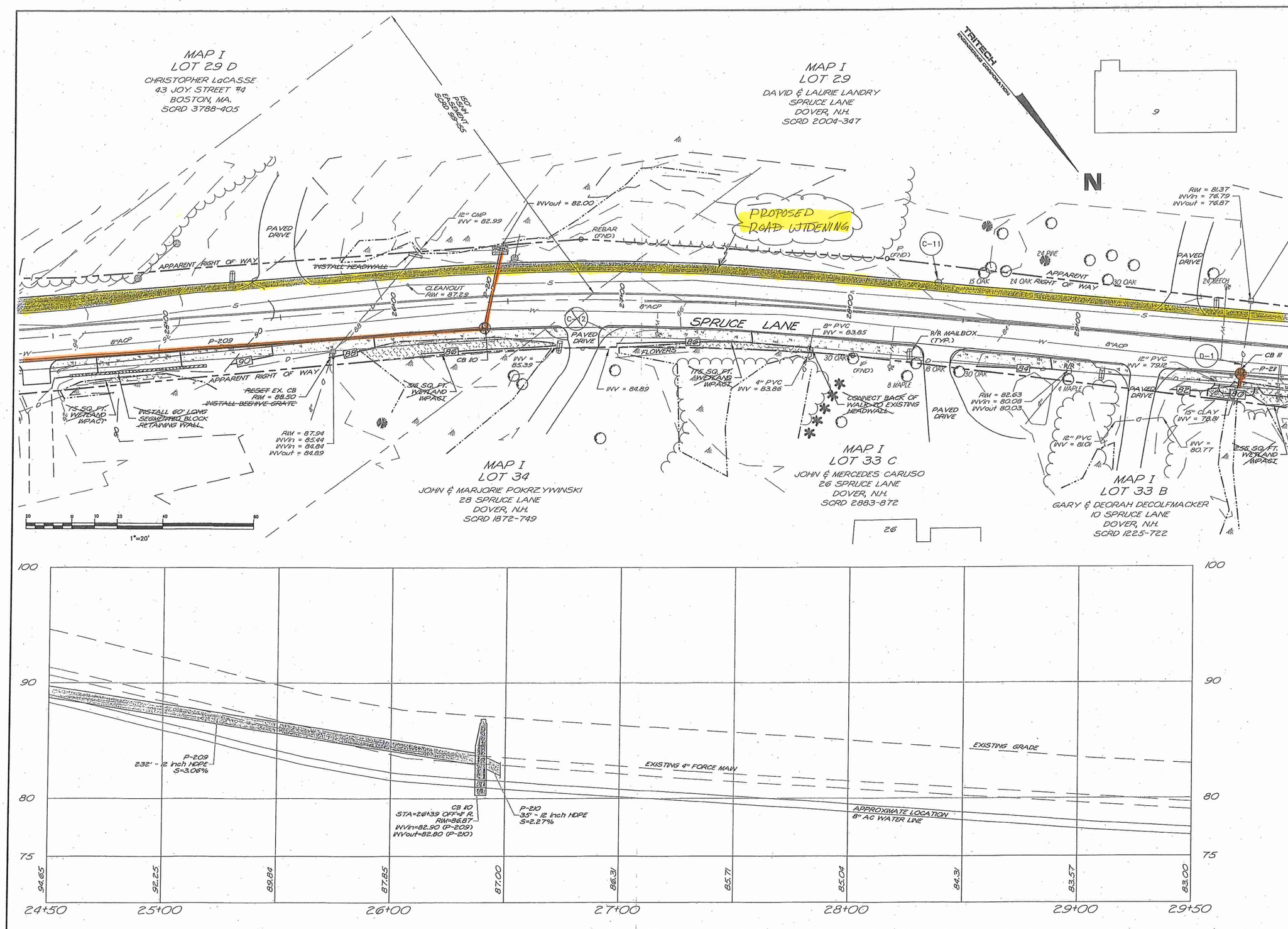

TRITECH
ENGINEERING CORPORATION

755 CENTRAL AVENUE
DOVER, NEW HAMPSHIRE 03820
TELEPHONE 603 742 8107
FAX 603 742 3630

REVISIONS

DATE:	DESCRIPTION:
3/11/2013	REVISE PER ENGINEERING COMMENTS
3/19/2014	REVISE PER ENGINEERING COMMENTS
6/20/16	DJJ

ROADWAY PLAN AND PROFILE
CITY OF DOVER
MAST ROAD & SPRUCE LANE
SPRUCE LANE
DOVER, NEW HAMPSHIRE
SEPTEMBER 1, 2011 JOB No. 11105
SCALE: 1" = 20'

SHEET NO.
C-6

13 June 2016 11105-Full Set.par 11105-Full Set.par

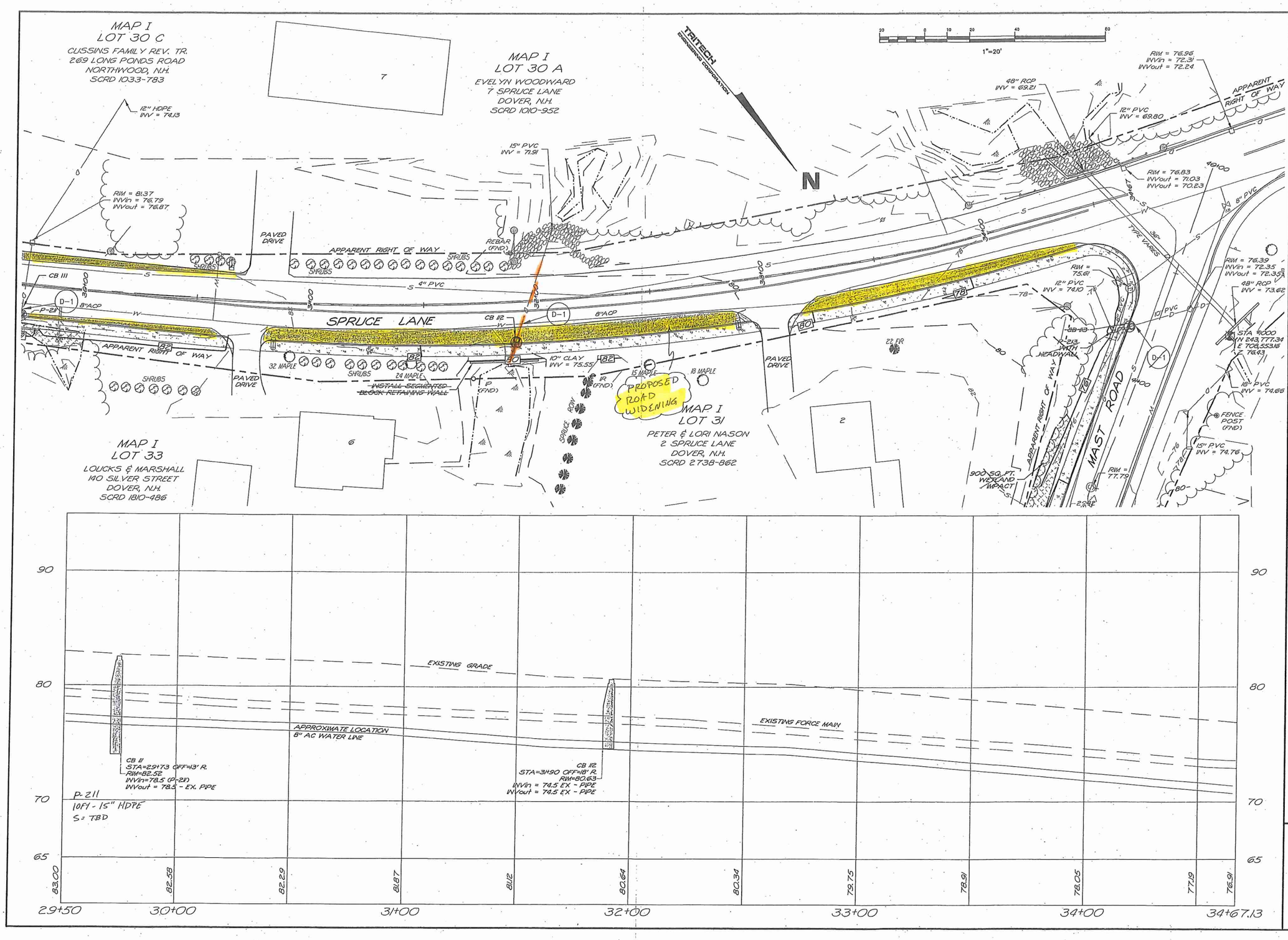

TRITECH
ENGINEERING CORPORATION
735 CENTRAL AVENUE
DOVER, NEW HAMPSHIRE 03820
TELEPHONE 603 742 8107
FAX 603 742 9830

REVISIONS

DATE:	DESCRIPTION:
3/11/2013	REVISE PER ENGINEERING COMMENTS
3/19/2014	REVISE PER ENGINEERING COMMENTS
6/19/15	DLW

ROADWAY PLAN AND PROFILE

CITY OF DOVER
MAST ROAD & SPRUCE LANE

SPRUCE LANE

DOVER, NEW HAMPSHIRE

SEPTEMBER 1, 2011 JOB No. 11105

SCALE: 1" = 20'

SHEET NO.

C-7

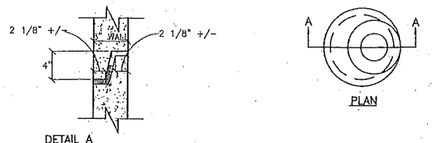

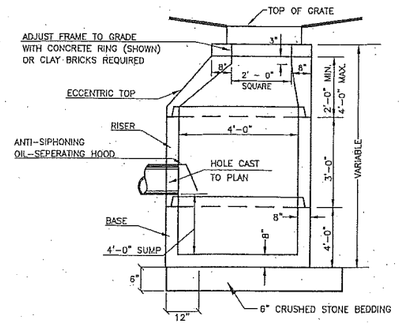

SECTION A-A

NOTES

1. ALL SECTIONS SHALL BE CONCRETE CLASS AA(4000 psi).
2. CIRCUMFERENTIAL REINFORCEMENT SHALL BE 0.12 SQ.IN. PER LINEAR FOOT IN ALL SECTIONS AND SHALL BE PLACED IN THE CENTER THIRD OF THE WALL.
3. THE TONGUE OR GROOVE OF THE JOINT SHALL CONTAIN ONE LINE OF CIRCUMFERENTIAL REINFORCEMENT EQUAL TO 0.12 SQ. IN. PER LINEAR FOOT.
4. RISERS OF 1', 2', 3' & 4' CAN BE USED TO REACH DESIRED DEPTH.
5. THE STRUCTURES SHALL BE DESIGNED FOR H-20 LOADING.
6. FOR SHALLOW INVERTS, A FLAT TOP SLAB WITH TONGUE AND GROOVE JOINTS (DETAIL A), MEETING H-20 LOADING MAY BE USED.

1 CATCH BASIN
NOT TO SCALE

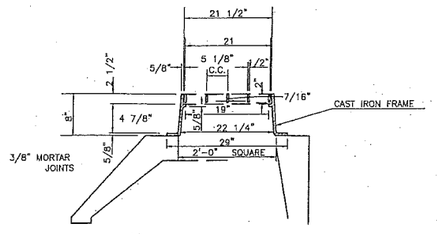

NOTES

1.) USE NEENAH R-3570
2.) FOR SHALLOW INVERTS, USE NEENAH R-3570-A.

9 CATCH BASIN FRAME & GRATE
NOT TO SCALE

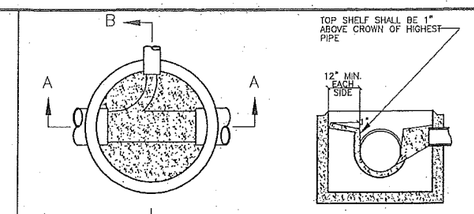

NOTE:
CARE SHALL BE TAKEN TO INSURE THAT THE CONCRETE INVERT IS A SMOOTH CONTINUATION OF THE DRAIN INVERT.

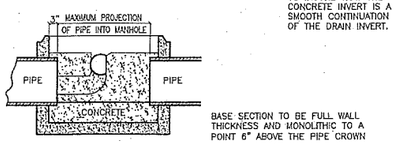

BASE SECTION TO BE FULL WALL THICKNESS AND MONOLITHIC TO A POINT 6" ABOVE THE PIPE CROWN

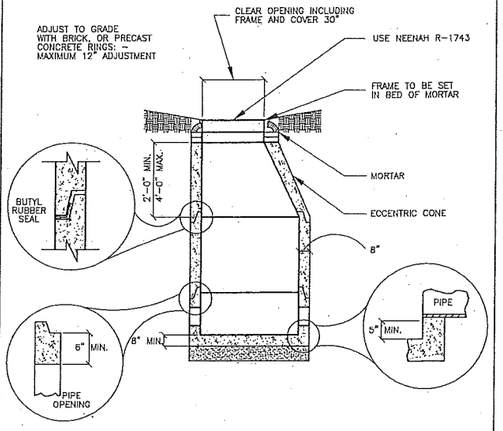

6 DRAIN MANHOLE
NOT TO SCALE

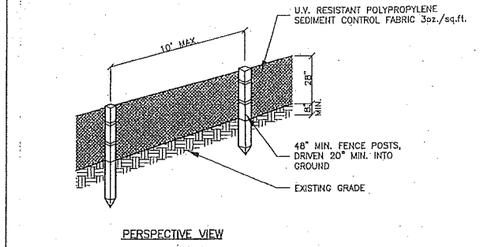

PERSPECTIVE VIEW

NOTES

1. THE GEOTEXTILE FABRIC SHALL MEET THE DESIGN CRITERIA FOR BEST MANAGEMENT PRACTICE FOR SILT FENCES, OF THE "STORMWATER MANAGEMENT AND EROSION AND SEDIMENT CONTROL HANDBOOK FOR URBAN AND DEVELOPING AREAS IN NEW HAMPSHIRE" PREPARED BY ROCKINGHAM COUNTY CONSERVATION DISTRICT, DATED AUGUST 1992.
2. THE FABRIC SHALL BE EMBEDDED A MINIMUM OF 8 INCHES INTO THE GROUND AND THE SOIL COMPACTED OVER THE EMBEDDED FABRIC.
3. WHEN TWO SECTIONS OF FILTER CLOTH ADJOIN EACH OTHER, THEY SHALL BE OVERLAPPED BY 6 INCHES, FOLDED AND STAPLED.
4. FENCE POSTS SHALL BE A MINIMUM OF 36 INCHES LONG AND DRIVEN A MINIMUM OF 20 INCHES INTO THE GROUND. WOOD POSTS SHALL BE OF SOUND QUALITY HARDWOOD AND SHALL HAVE A MINIMUM CROSS SECTIONAL AREA OF 3.0 SQ.IN..
5. MAINTENANCE SHALL BE PERFORMED AS NEEDED TO PREVENT BULGES IN THE SILT FENCE DUE TO DEPOSITION OF SEDIMENT.
6. REMOVE BY HAND AND PROPERLY DISPOSE OF ALL SEDIMENT PRIOR TO REMOVING FENCE.

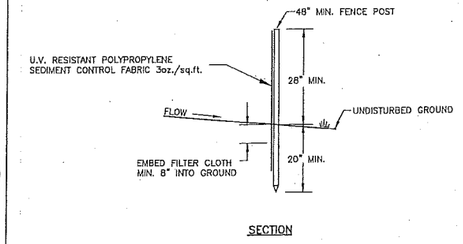

SECTION

7 SILT FENCE
NOT TO SCALE

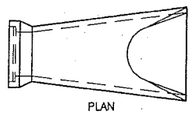

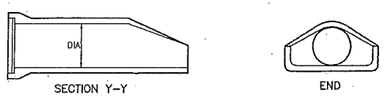

10 FLARED END SECTION
NOT TO SCALE

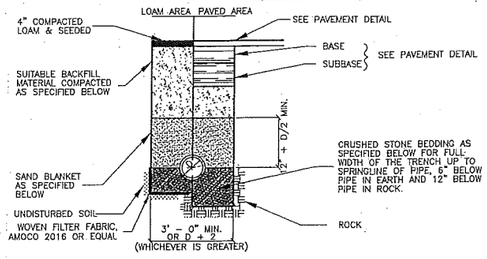

SAND BLANKET	
SIEVE SIZE	%FINER BY WEIGHT
1/2"	90 - 100
200	0 - 15

CRUSHED STONE BEDDING*	
SIEVE SIZE	%FINER BY WEIGHT
1"	100
3/4"	90 - 100
3/8"	20 - 55
#4	0 - 10
#8	0 - 5

*EQUIVALENT TO STANDARD STONE SIZE #67 - SECTION 703 OF NHDOT STANDARD SPECIFICATIONS

BACKFILL MATERIAL BELOW PAVED OR CONCRETE AREAS, BEDDING MATERIAL, AND SAND BLANKET SHALL BE COMPACTED TO NOT LESS THAN 95% OF AASHTO T 99, METHOD C. SUITABLE BACKFILL MATERIAL BELOW LOAM AREAS SHALL BE COMPACTED TO NOT LESS THAN 90% OF AASHTO T 99, METHOD C.

11 STORM DRAINAGE TRENCH
NOT TO SCALE

CRITICAL AREAS

Anywhere that existing vegetation is to be removed will require immediate erosion control treatment. Special care should be taken where runoff enters wetlands.

EROSION AND SEDIMENT CONTROL PRACTICES

Erosion and sediment control practices will include the use of permanent grass ditches, rip-rap, and silt fence. All erosion and sediment control practices will be constructed and maintained according to the minimum standards and specifications contained in the "Erosion and Sediment Control Design Handbook Handbook for Developing Areas of New Hampshire".

A. Erosion and Sediment Control Measures

1. The erosion control procedures shall conform to Section 645 of the "Standard Specifications for Road and Bridge Construction" of the NH DOT, and the "Stormwater Management and Erosion and sediment Control Handbook for Urban and Developing Areas in New Hampshire".
2. During Construction and thereafter, erosion control measures are to be implemented as noted. The smallest practical area of land should be exposed at any one time during development. The amount of exposed areas which are temporarily stabilized without permanent stabilization shall be limited to 5 acres.
3. During grading operations, install stone check dams at 50 foot intervals in drainage swales and at drain inlets where shown. Barriers are to be maintained and cleaned until disturbed areas are stabilized.
4. Any disturbed areas which are to be left temporarily, and which will be regraded later during construction shall be machine hay mulched and seeded with rye grass to prevent erosion.
5. Silt fences and other erosion control measures shall be inspected weekly and after every 0.5" rainfall event during the life of the project. All damaged silt fences shall be repaired. Sediment deposits shall periodically be removed.
6. Topsoil required for the establishment of vegetation shall be stock piled in amounts necessary to complete finished grading of all exposed areas.
7. Areas to be filled shall be cleared, grubbed, and stripped of topsoil to remove trees, vegetation, roots or other objectionable material. Stumps shall be disposed by grinding or fill in an approved facility.
8. All fills shall be placed and compacted to reduce erosion, slippage settlement, subsidence or other related problems.
9. All fill shall be placed and compacted in layers not to exceed 8 inches in thickness.
10. Frozen material or soft, mucky or highly compressible material shall not be incorporated into fills.
11. Fill material shall not be placed on a frozen foundation subgrade.
12. Disturbed areas shall be seeded immediately following finished grading.
13. Limit of exposed area that is temporarily stabilized without permanent stabilization is 5 acres or less.
14. All areas not stabilized by Nov. 1st must be protected by Erosion Control Blankets or equivalent and mulched/seeded with winter rye or oats.
15. All disturbed areas must be seed and mulched within 3 days of final grading, permanently stabilized within 15 days of final grading or temporarily stabilized within 45 days of initial disturbance.
16. All ditches and swales are to be stabilized prior to directing runoff to these features.
17. All cut and fill slopes shall be seeded immediately.
18. An area shall be considered stable if one of the following has occurred:
    a.) Base course gravels are installed in areas to be paved
    b.) A minimum of 85% vegetated growth has been established
    c.) A minimum of 3" of non-erosive material such as stone or riprap has been installed
    d.) Erosion control blankets have been properly installed.

B. Vegetative Practice

All ground areas opened up for construction will be regraded, loamed, seeded and mulched in the shortest practical time. All Temporary and Permanent Seeding must be applied prior to October 1st. Employ temporary erosion and sedimentation control devices as detailed in this plan as necessary until adequate stabilization has been assured.

A. Temporary Seeding & Hay Mulching

1. At no time shall any disturbed area remain unstabilized for longer than 30 days. All areas where construction is not completed within 30 days of the initial disturbance shall receive temporary seeding measures.
2. Fertilizer shall be spread on the top layer of loam and worked into the surface. Fertilizer application rate shall be 300 pounds per acre of 10-10-10 fertilizer.
3. Seed shall be Winter Rye, 112 LBS. per acre.
4. Remove stones and trash that will interfere with seeding the area. Where feasible, till the soil to a depth of about 3 inches to prepare a seedbed and mix fertilizer into the soil. The seedbed should be left in a firm and smooth condition. The last tillage operation should be performed across the slope whenever practical.
5. If seeding between May 15th and August 15th, hay mulch shall be applied immediately after seeding at a rate of 1.5 to 2 tons per acre and shall be held in place using appropriate techniques from the Erosion and Sediment Control Handbook.
6. The surface shall be watered and kept moist with a fine spray as required without washing away the soil, until the grass is well established. Any areas which are not satisfactorily covered with grass shall be reseeded, and all noxious weeds are removed.

B. Permanent Seeding & Hay Mulching

1. All disturbed areas shall be loamed (4") and limed. Lime shall be thoroughly incorporated into the loam layer at a rate of 2 tons per acre.
2. Fertilizer shall be spread on the top layer of loam and worked into the surface. Fertilizer application rate shall be 500 pounds per acre of 10-20-20 fertilizer.
3. Seed shall be 48 lbs. per acre, SCS mixture "c" (20 lbs tall fescue, 20 lbs. creeping red fescue and 8 lbs. birds foot trefoil = 48 lbs total.) The soil shall be lightly raked immediately before seeding. One half the seed shall be sown in one direction and the other half at right angles to the original direction. It shall be lightly raked in to the soil to a depth not over 1/4 inch and rolled with hand roller weighing not over 100 pounds per linear foot of width.
4. Hay mulch shall be applied immediately after seeding at a rate of 1.5 to 2 tons per acre and shall be held in place using appropriate techniques from the Erosion and Sediment Control Handbook. The surface shall be watered and kept moist with a fine spray as required, without washing away the soil, until the grass is well established. Any areas which are not satisfactorily covered with grass shall be reseeded, and all noxious weeds removed.

CONSTRUCTION SEQUENCE

1. Do not begin construction until all local, state and federal permits have been applied for and received.
2. Install silt fences and hay bale barriers necessary to control erosion and prevent sediment contamination of wetlands prior to any earth moving activities.
3. Cut and remove trees, shrubs, saplings, brush, vines and other debris and rubbish as required for sediment construction.
4. Construct drainage.
5. Loam and seed disturbed areas in accordance with vegetative practice and general construction notes. Cut and fill slopes shall be seeded immediately after their construction.
6. All areas receiving runoff shall be stabilized prior to directing runoff to them.
7. All soils that are finish graded must be stabilized within 72 hours of disturbance.
8. Maintain disturbed areas as necessary.

MAINTENANCE

During the period of construction and/or until long term vegetation is established:
1. Seeded areas will be fertilized and reseeded as necessary to insure vegetative establishment.
2. The side slopes will be checked after each significant rainfall.
3. The side slopes will be checked weekly and repaired when necessary until adequate vegetation is established.
4. The silt fence barriers will be checked regularly. Necessary repairs will be made to correct undermining or deterioration of the structures.

WINTER CONSTRUCTION NOTES

1. All proposed vegetated areas which do not exhibit a minimum of 85% vegetation growth by October 15th, or which are disturbed after October 15th, shall be stabilized by seeding and installing erosion control blankets on slopes greater than 3:1, and seeding and placing 3 to 4 tons of mulch per acre, secured with anchored netting, elsewhere. The installation of erosion control blankets or mulch and netting shall not occur over accumulated snow or on frozen ground and shall be completed in advance of thaw or spring melts.
2. All ditches or swales which do not exhibit a minimum of 85% vegetation growth by October 15th, or which are disturbed after October 15th, shall be stabilized temporarily with stone or erosion control blankets appropriate for the design flow conditions.
3. After November 15th, incomplete road surfaces, where work has stopped for the winter season, shall be protected with a minimum of 3 inches of crushed gravel per NHDOT Item 304.3.

12 EROSION AND SEDIMENT CONTROL NOTES

TRIED
ENGINEERING CORPORATION
750 CENTRAL AVENUE
DOVER NEW HAMPSHIRE 03820
TELEPHONE 603 742 8107
FAX 603 742 3630

REVISIONS

DATE:	DESCRIPTION:
3/11/2013	REVISE PER ENGINEERING COMMENTS
3/19/2014	REVISE PER ENGINEERING COMMENTS

CONSTRUCTION DETAILS
CITY OF DOVER
MAST ROAD & SPRUCE LANE
SPRUCE LANE
DOVER, NEW HAMPSHIRE
SEPTEMBER 1, 2011
JOB No. 11105

SHEET NO.
C-16

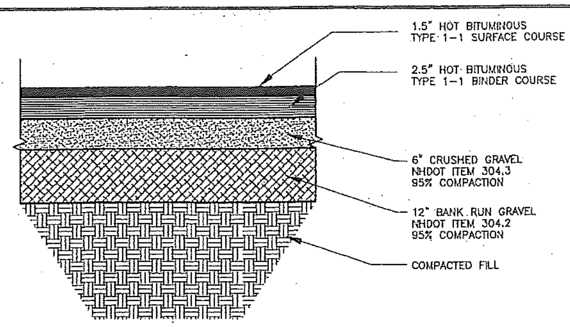

GENERAL MATERIALS NOTES – APPLIES TO ALL DETAILS UNLESS NOTED.

1.) MATERIALS & CONSTRUCTION METHODS SHALL CONFORM TO THE STATE OF NEW HAMPSHIRE STANDARD SPECIFICATIONS FOR ROAD & BRIDGE CONSTRUCTION.
2.) COMPACTED FILL UNDER PAVEMENT OR CONCRETE AREAS SHALL BE FREE OF ORGANIC MATERIAL & COMPACTED IN 6" LIFTS TO NOT LESS THAN 95% OPTIMUM DENSITY.
3.) BANK RUN GRAVEL SHALL BE:

SIEVE	PERCENT PASSING
6"	100%
#4	25 – 70%
#200	≤ 12% OF PASSING #4

4.) CRUSHED GRAVEL SHALL BE:

SIEVE	PERCENT PASSING
3"	100%
2"	95 – 100%
1"	55 – 85%
#4	27 –52%
#200	0 – 12%

5.) BASE COURSE OF PAVEMENT SHALL BE 3/4" DIA. TYPE I-1 HOT BITUMINOUS CONCRETE (225 LBS/SQ.YD.)
6.) WEARING COURSE OF PAVEMENT SHALL BE 1/2" DIA. TYPE I-1 HOT BITUMINOUS CONCRETE (115 LBS/SQ.YD.)

(1) TYPICAL PAVEMENT SECTION
NOT TO SCALE

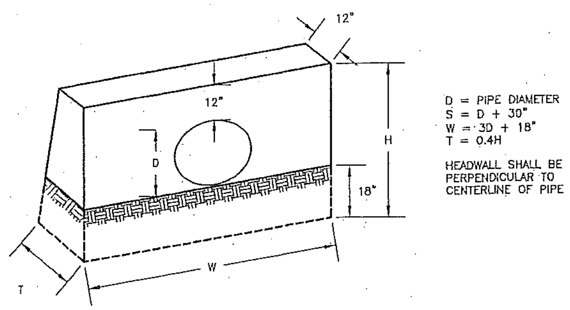

D = PIPE DIAMETER
S = D + 30"
W = 3D + 18"
T = 0.4H

HEADWALL SHALL BE PERPENDICULAR TO CENTERLINE OF PIPE

(2) CONCRETE HEADWALL *Per NHDOT Standard Detail-HW-1 Plate 1
NOT TO SCALE

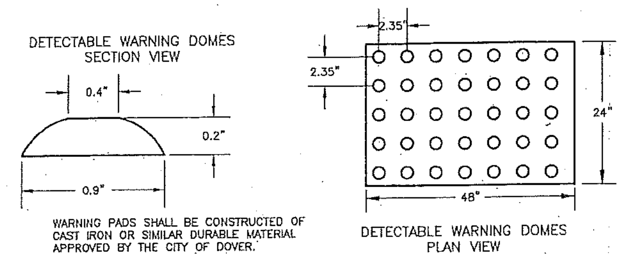

WARNING PADS SHALL BE CONSTRUCTED OF CAST IRON OR SIMILAR DURABLE MATERIAL APPROVED BY THE CITY OF DOVER.

DETECTABLE WARNING DOMES PLAN VIEW

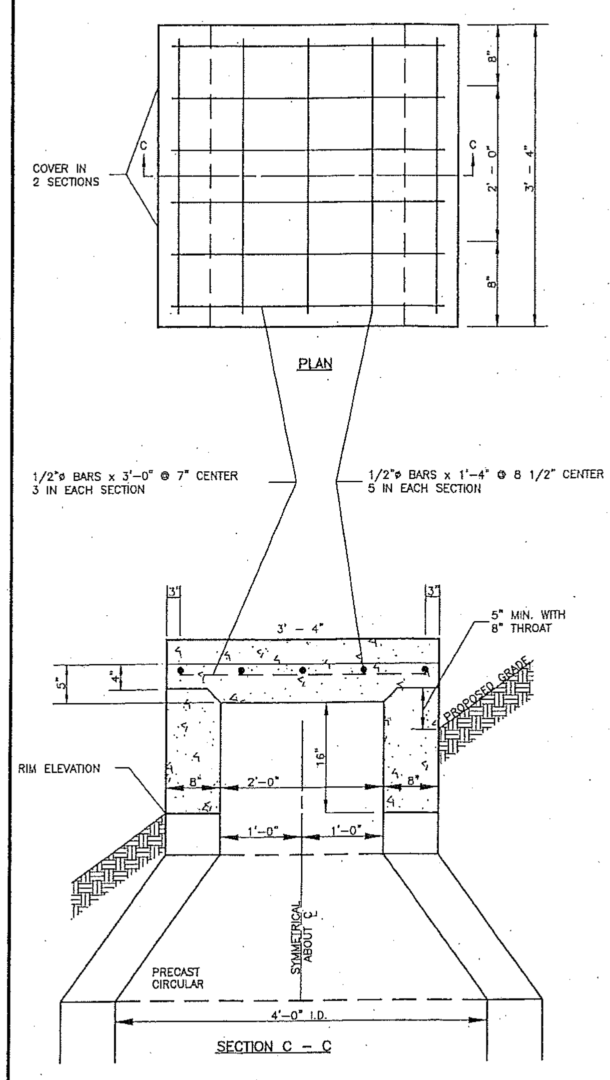

(9) CATCH BASIN – DROP INLET TYPE C (NHDOT)
NOT TO SCALE

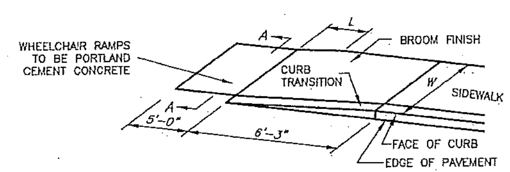

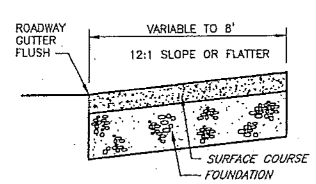

SECTION A–A

W	L	S.Y.
5'–0"	2'–9"±	6.3
6'–0"	2'–0"±	7.2
7'–0"	1'–3"±	8.0
8'–0"	0'–0"	8.1

NOTES:
1. THE DIMENSIONS SHOWN AT ROADWAY EDGE ARE FIXED DISTANCES.
2. RAMP CROSS SECTION TO BE SAME AS ADJACENT SIDEWALK; I.E., DEPTH OF SURFACE AND FOUNDATION.
3. PORTLAND CEMENT CONCRETE RAMPS ARE TO BE TEXTURED BY BROOMING IN A DIRECTION PARALLEL TO THE LENGTH OF THE RAMP.
4. SIDEWALKS THAT CROSS DRIVEWAYS SHALL BE RAMPED TO MEET THE GRADE OF DRIVEWAY.
5. THESE DIMENSIONS ARE SUBJECT TO CHANGE IN THE FIELD IF EXISTING APPURTENANCES OR CONDITIONS WILL MAKE THE RAMP LOCATIONS IMPRACTICAL OR UNSAFE.
6. DETECTABLE WARNINGS TO BE INSTALLED 6" FROM EDGE OF RAMP
7. DETECTABLE WARNINGS PADS SHALL BE CONSTRUCTED OF CAST IRON OR SIMILAR DURABLE MATERIAL APPROVED BY THE CITY OF DOVER.

(10) WHEEL CHAIR RAMP
NOT TO SCALE

(D-1) DRAIN NOTES:

1. CONNECT EXISTING PIPE TO PROPOSED CATCH BASIN. INVERTS AND SIZES OF EXISTING PIPES SHALL BE VERIFIED IN THE FIELD BY CONTRACTOR PRIOR TO ORDERING STRUCTURES.
2. CORE EXISTING CATCH BASIN FOR PIPE P–206. INV = 106.54.
3. CORE EXISTING CATCH BASIN FOR PIPE P–214. INV = 84.10.
4. CORE EXISTING CATCH BASIN FOR PIPE P–219. INV = 111.20.
5. CORE EXISTING CATCH BASIN FOR PIPE P–227a. INV = 94.00.
6. RESET RIM ON EXISTING DRAIN MANHOLE AT 105.85.
7. RESET EXISTING CATCH BASIN. RIM = 88.50. REUSE EXISTING PIPES WHERE POSSIBLE.
8. REMOVE EXISTING DROP–INLET CATCH BASIN.
9. ABANDONMENT OF EXISTING DRAIN PIPES SHALL BE DONE IN ACCORDANCE WITH PROJECT SPECIFICATIONS, SECTION 02600 H.
10. ABANDONMENT OF EXISTING DRAIN STRUCTURES SHALL BE DONE IN ACCORDANCE WITH PROJECT SPECIFICATIONS, SECTION 02700 I.

(C-1) CONSTRUCTION NOTES:

1. THE CONTRACTOR IS REQUIRED UNDER NEW HAMPSHIRE LAW TO CONTACT "DIG SAFE" AT 1–800–225–4977, 72 HOURS PRIOR TO THE START OF CONSTRUCTION. THE CONTRACTOR SHALL MAINTAIN THE "DIG SAFE" LOCATIONS THROUGH OUT THE DURATION OF THE PROJECT. THE CONTRACTOR SHALL BEAR THE COST TO REPAIR ANY UTILITIES DAMAGED DURING THE COURSE OF THE WORK.
2. ALL MATERIALS AND CONSTRUCTION SHALL CONFORM WITH THE APPLICABLE CITY AND STATE CODES, AND WITH THE PROJECT SPECIFICATIONS.
3. EXISTING UTILITIES – ALL INFORMATION ON, AND LOCATION OF, EXISTING UTILITIES ARE APPROXIMATE AND BASED ON FIELD INFORMATION AND AVAILABLE PLANS. EXACT LOCATIONS AND DEPTHS TO BE VERIFIED BY THE CONTRACTOR PRIOR TO CONSTRUCTION.
4. ALL CONSTRUCTION SHALL CONFORM WITH THE STATE OF NEW HAMPSHIRE DEPARTMENT OF TRANSPORTATION (NHDOT) "STANDARD SPECIFICATIONS FOR ROAD AND BRIDGE CONSTRUCTION"; HEREINAFTER REFERRED TO AS THE "STANDARD SPECIFICATIONS" AND ALSO WITH THE "CITY OF DOVER SPECIFICATIONS".
5. ALL BACKFILL IN TRENCHES AND FILL FOR ROADBEDS SHALL BE THOROUGHLY COMPACTED TO 95% OF OPTIMUM DENSITY.
6. LAND CLEARING SHALL BE LIMITED TO MINIMAL AMOUNTS DURING CONSTRUCTION.
7. INSTALL SILT FENCE PER DETAIL 11, SHEET SP–5.
8. MATCH EXISTING PAVEMENT.
~~9.~~ INSTALL HANDICAP ACCESSIBLE REINFORCED CONCRETE RAMP (MAXIMUM SLOPE = 1" IN 12") FROM PAVEMENT GRADE TO SIDEWALK GRADE AT ALL DRIVEWAY AND ROADWAY CROSSINGS. ROADWAY CROSSINGS SHALL HAVE DETECTABLE WARNING PADS INSTALLED. ALL RAMPS SHALL BE IN COMPLIANCE WITH ALL A.D.A. STANDARDS AND CONSTRUCTED PER DETAIL 10, SHEET C–17.
~~10.~~ RESTRIPE CENTER LINE ON SPRUCE LANE.
~~11.~~ RELOCATE EXISTING UTILITY POLE.
12. TREES LOCATED WITHIN THE LIMITS OF CONSTRUCTION TO BE SAVED SHALL BE PROTECTED WITH ORANGE CONSTRUCTION FENCE, INSTALLED A MINIMUM OF 2' FROM THE TRUNK.
~~13.~~ INSTALL PAVED PARKING AREA WITH STRIPING PER DETAIL 1, SHEET C–17.

DRAIN STRUCTURE TABLE

STRUCTURE	RIM ELEV.	INVin	INVout	SUMP
CB 101	111.68	106.90 – EX PIPE 106.90 – P–202	106.88 – EX. PIPE	102.88
CB 102	112.38	108.40 – P–203	108.30 – P–202	104.30
CB 103	113.00	–	109.00 – P–203	100.50
CB 104	114.21	110.55 – P–204a	110.45 – P–204	106.45
CB 104a	113.91	–	110.90 – P–204a	106.90
CB 105	114.77	108.75 – P–204	108.65 – P–205	104.65
CB 106	110.48	107.10 – P–205	107.00 – P–206	103.00
CB 107	105.23	100.00 – P–230 100.00 – P–231 100.00 – P–232	99.90 – P–207	95.90
CB 108	103.10	–	98.00 – P–208	107.00
CB 109	97.51	90.10 – P–208	90.00 – P–209	86.00
CB 110	86.87	82.90 – P–209	82.80 – P–210	78.80
CB 111	82.52	78.50 – P–211	78.50 – EX. PIPE	74.50
CB 112	80.63	74.5 – EX. PIPE	74.5 – EX. PIPE	70.50
CB 113	76.25	73.65 – P–213	73.6 – EX. PIPE	89.60
CB 114	87.04	84.30 – P–215	84.20 – P–214	80.20
CB 115	89.68	85.70 – P–216	85.60 – P–215	81.60
CB 116	92.79	88.30 – P–217	88.20 – P–216	84.20
CB 117	97.70	91.10 – P–218	91.00 – P–217	87.00
CB 118	101.70	–	95.00 – P–218	91.00
CB 119	116.45	111.60 – P–220	111.50 – P–219	107.50
CB 120	116.60	113.25 – P–234	113.15 – P–220	109.15
CB 121	112.20	–	108.00 – P–221	104.00
CB 122	104.11	94.25 – P–222a	94.15 – P–222	90.15
CB 123	97.92	92.75 – P–222	92.65 – P–223	88.65
CB 124	96.56	92.00 – P–223 92.00 – P–224 92.00 – P–225	91.90 – EX. PIPE	87.90
CB 125	96.25	–	92.25 – P–225	88.25
CB 126	94.53	90.60 – P–229	90.50 – P–226	86.50
CB 127	98.13	93.85 – P–227a	93.75 – P–227	89.75
CB 128	108.49	103.95 – P–221 104.60 – EX. PIPE 105.60 – P–235	103.85 – EX. PIPE	99.85
CB 129	95.16	91.60 – P–227	91.50 – P–229	87.50
CB 131	96.40	–	92.40 – P–224	90.40
CB 132	95.50	–	91.18 – EX. PIPE 91.20 – EX. PIPE	89.18
CB 133	112.00	108.80 – P–218a	108.80 – P–233	106.80
CB 134	116.00	–	114.00 – P–234	112.00
CB 135	111.30	106.80 – P–236	106.70 – P–235	104.70
CB 136	112.00	107.60 – P–221	107.50 – P–236	105.50

DRAIN PIPE TABLE

PIPE	START STRUCTURE	END STRUCTURE	UPSTREAM INVERT	DOWNSTREAM INVERT	SIZE	LENGTH	SLOPE
P–202	CB 102	CB 101	108.30	106.90	12"	122'	0.0011 ft/ft
P–203	CB 103	CB 102	109.00	108.40	12"	18'	0.0016 ft/ft
P–204	CB 104	CB 105	110.45	108.75	12'	246'	0.0068 ft/ft
P–204a	CB 104	CB 104a	110.90	110.55	12"	111'	0.0890 ft/ft
P–205	~~CB 105~~ DMH1	~~CB 106~~ DMH2	108.~~65~~ 48	~~107.10~~ 106.64	12"	221'	~~0.0071~~ ft/ft .0043
P–206	~~CB 106~~ DMH2	EX. CB 2343	~~107.00~~ 106.54	106.~~54~~ 44	12"	16'	~~0.0230~~ ft/ft .006
P–207	CB 107	~~FES~~ HW	99.50	98.00	18"	36'	0.0390 ft/ft
P–208	CB 108	CB 109	98.00	90.10	12"	229'	0.0343 ft/ft
P–209	CB 109	CB 110	90.00	82.90	12"	230'	0.0309 ft/ft
P–210	CB 110	HEADWALL	82.80	82.00	12"	35'	0.0227 ft/ft
P–211	~~HEADWALL~~	CB 111	78.81	78.50	12"	7'	0.0518 ft/ft
P–213	HEADWALL	CB 113	74.00	73.65	12"	8'	0.0437 ft/ft
P–214	CB 114	EX CB 2862	84.20	84.10	12"	24'	0.0042 ft/ft
P–215	CB 115	CB 114	85.60	84.30	12"	126'	0.0103 ft/ft
P–216	CB 116	CB 115	88.20	85.70	12"	169'	0.0149 ft/ft
P–217	CB 117	CB 116	91.00	88.30	12"	181'	0.0149 ft/ft
P–218	CB 118	CB 117	95.00	91.10	12"	125'	0.0312 ft/ft
P–218a	EX CB 2552	CB 133	110.92	108.80	12"	66'	0.0321 ft/ft
P–219	CB 119	EX CB 2551	111.50	110.92	12"	27'	0.0215 ft/ft
P–220	CB 120	CB 119	113.15	111.60	12"	255'	0.0061 ft/ft
P–221	CB 121	CB 136	108.00	107.60	12"	6'	0.0667 ft/ft
P–222	CB 122	CB 123	94.15	92.75	12"	150'	0.0093 ft/ft
P–222a	EX DMH 2329	CB 122	100.79	94.25	12"	96'	0.0665 ft/ft
P–223	CB 123	CB 124	92.65	92.00	12"	55'	0.0118 ft/ft
P–224	CB 124	CB 131	92.40	92.00	12"	6'	0.0470 ft/ft
P–225	CB 125	CB 124	92.25	92.00	12"	102'	0.0240 ft/ft
P–226	CB 126	FES	90.50	90.20	12"	35'	0.0086 ft/ft
P–227	CB 127	CB 129	93.75	91.60	12"	168'	0.0128 ft/ft
P–227a	EX CB 2324	CB 127	94.00	93.85	12"	4'	0.0217 ft/ft
P–228	CB 128	EX CB 2328	106.47	105.60	12"	16'	0.0641 ft/ft
P–229	CB 129	CB 126	91.50	90.60	15"	76'	0.0118 ft/ft
~~P–230~~	~~EX CB 671~~	~~CB 107~~	~~104.60~~	~~100.00~~	~~18"~~	~~275'~~	~~0.0165 ft/ft~~
P–231	CB 130	CB 107	101.45	100.00	15"	8'	0.1438 ft/ft
P–232	EX CB 2926	CB 107	101.49	100.00	12"	215'	0.0680 ft/ft
P–233	CB 133	FES	108.80	108.00	12"	23'	0.0348 ft/ft
P–234	CB 134	CB 120	114.00	113.25	12"	52'	0.0390 ft/ft
P–235	CB 135	CB 128	106.70	103.95	12"	226'	0.0120 ft/ft
P–236	CB 136	CB 135	107.50	106.80	12"	78'	0.0090 ft/ft
P-205A	CB 105	DMH2	108.65	108.58	12	7'	.001 Ft/Ft

TRITECH
ENGINEERING CORPORATION

755 CENTRAL AVENUE
DOVER, NEW HAMPSHIRE 03820
TELEPHONE 603 742 8107
FAX 603 742 3830

REVISIONS

DATE:	DESCRIPTION:
3/11/2013	REVISE PER ENGINEERING COMMENTS
3/19/2014	REVISE PER ENGINEERING COMMENTS
6/20/16	DW

CONSTRUCTION DETAILS
CITY OF DOVER
MAST ROAD & SPRUCE LANE
SPRUCE LANE
DOVER, NEW HAMPSHIRE
SEPTEMBER 1, 2011
JOB No. 11105

SHEET NO.
C-17